LEVEL SWITCHES Type DBC

The **DBC** Switches are designed to be mounted on a side of vessel, specially onto industrial steam boilers. The water level within vessel is checked by 1 float placed in the body and by two microswitches SPDT placed in the housing. They operate as follows **:** when level goes up or down more than the preset operation points, the float makes microswitch (1) trip (it controls *pump start/stop circuit*); but in the case level goes down to the *minimum* level, then the float makes the microswitch (2) trip too (it controls *alarm* and *stoppage* circuit of boiler). The two microswitches are placed within the housing and are snap action.
The Switch shows the *Minimum* level line on its outer body **:** during the mounting onto vessel, this line will correspond to the actual lowest level allowed by boiler. For liquids with specific gravity from 700kg/m³ up.

The Level Switches meet the PED and the ATEX standards (page 37).

Body. Cylindrical with outer Ø191mm, flanges included, in different types of metals. It is provided with 2 flanges allowing periodical inspection inside the main chamber to clean it from possible residues of the controlled liquid, and with a hole 1" NPT-F threaded for a periodical drain.
For further safety and production simplicity, float and rod and other inner parts are always made in AISI 316 stainless steel.

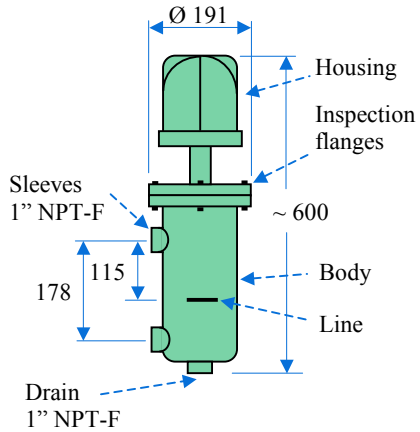

Connections to vessel. By means of 2 threaded sleeves 1" NPT-F.

Mounting on vessel. The switch shall be mounted onto vessel at height, so that the line level marked on chamber corresponds to Min level in the vessel.

Housing. In Aluminium casting Ø155×200mm, EEx dc IIC T6 flame-proof, with ¾" NPT-F threaded hole for electric connections. Including 2 microswitches SPDT type **A** (page 35), indipendent action, dust-proof, silver contact, 6Ares–24Vdc, and 6Ares–250Vac, temperatures –25/+85°C.

Differential. The two microswitches (1) (*pump start/stop*) and (2) (*minimum level*) are mounted in housing at different heights, (1) in upper position and (2) in lower position, at reciprocal distance of 20÷50mm.
When you wish to avoid too frequent operations of pump, you can keep (2) fixed and raise (1) of 10-20mm; the allowable change can be calculated on the basis of the below sketches.

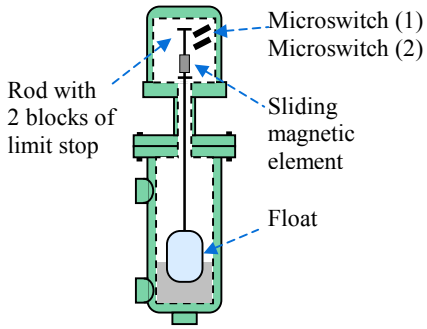

Upon request, special versions can be produced too.

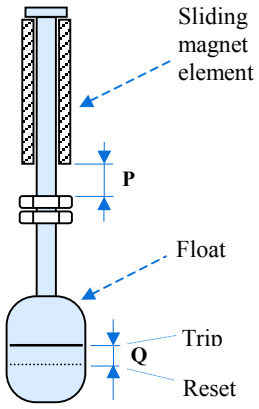

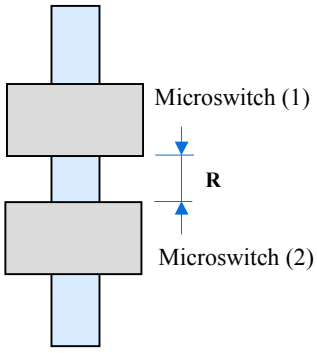

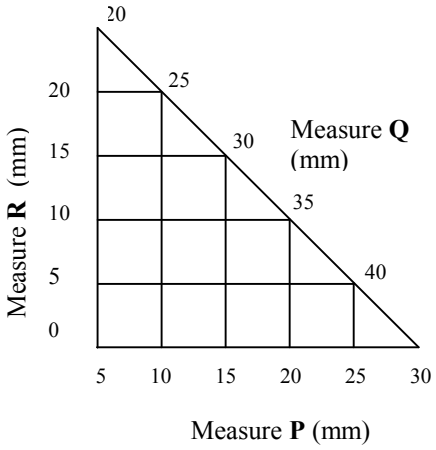

Code	*Body in*	*Pressure*	*Temperature*
DBC6	Carbon steel	21 Bar	230°C
DBC7	Carbon steel	42 Bar	230°C